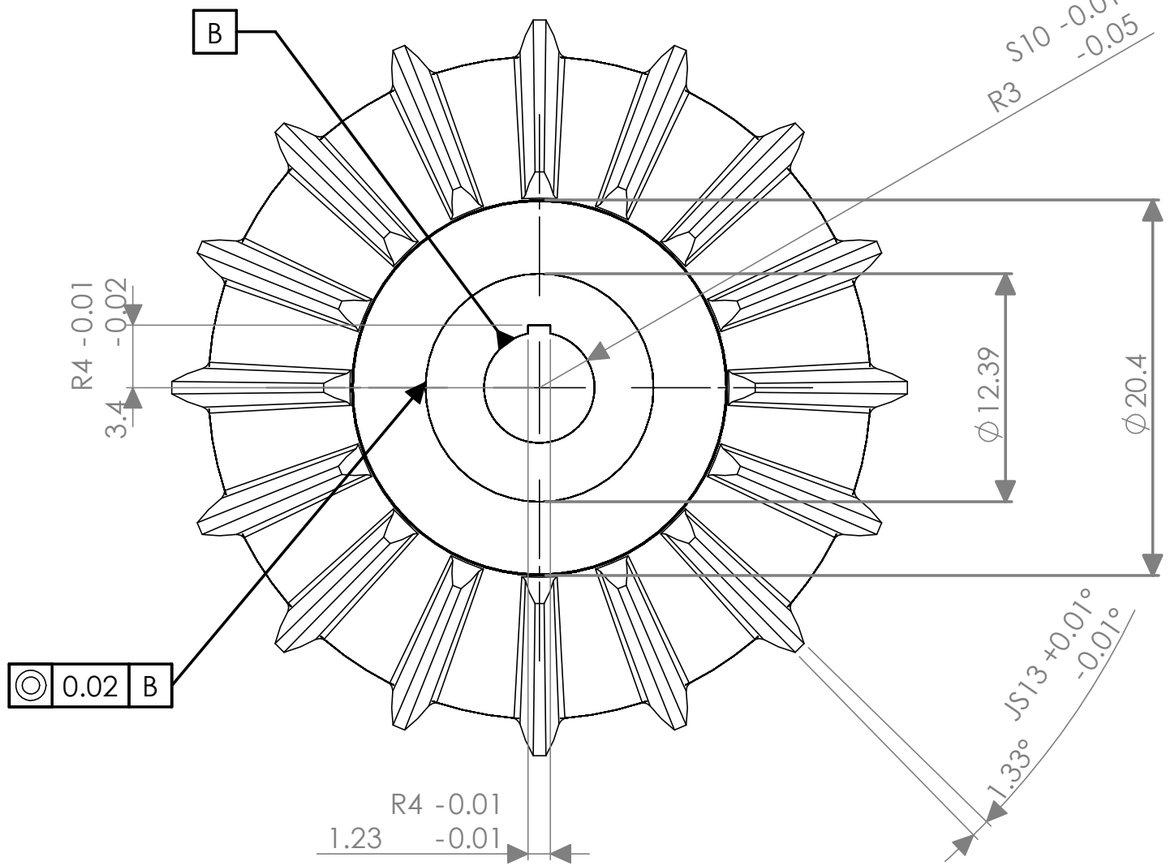

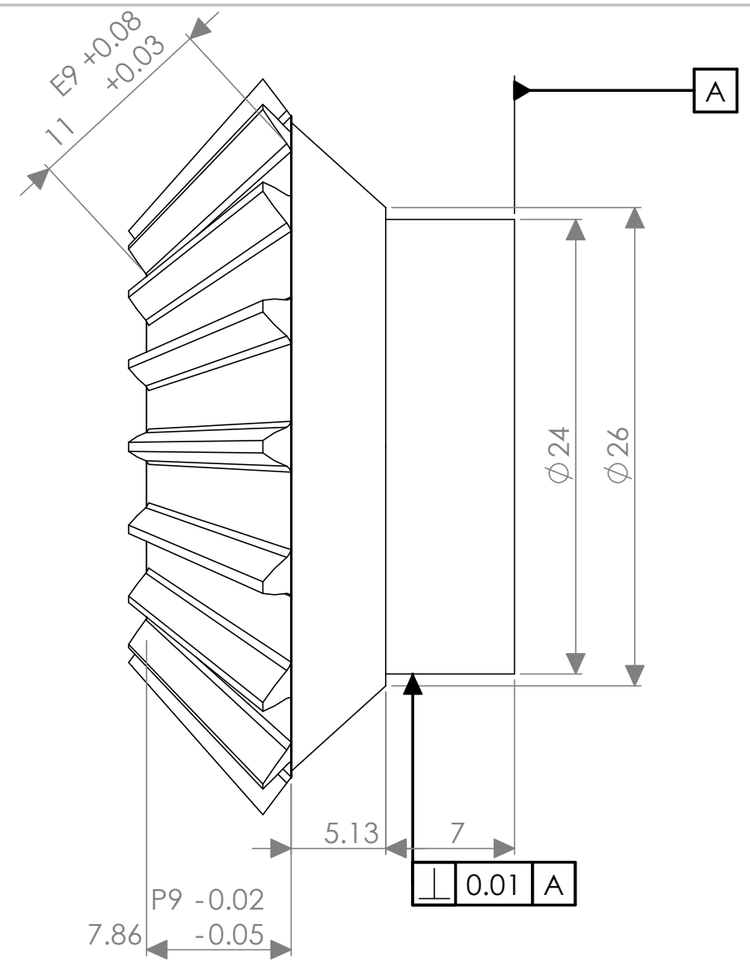

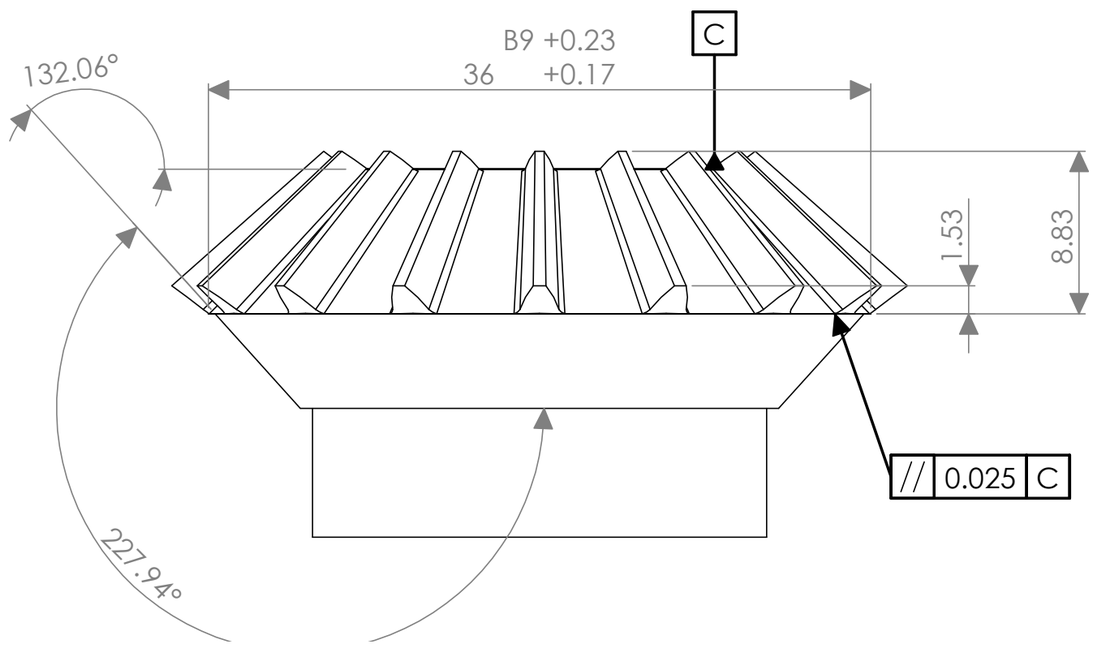

UNLESS OTHERWISE SPECIFIED: DIMENSIONS ARE IN MILLIMETERS SURFACE FINISH: Milled TOLERANCES: 0.5	Language : Engilish			Drawing Standard :BSI	DO NOT SCALE DRAWING	REVISION
					Reciprcating Saw Attachment Component	
	NAME	SIGNATURE	DATE		TITLE:	
DRAWN	PDobson		13-12-10		Drive Gear	
				MATERIAL: 2% Ni, Cr, Mo Steel	DWG NO. 1	A3
				WEIGHT: 0.491kg	SCALE: 3:1	SHEET 1 OF 3

SolidWorks Student License
Academic Use Only